APRILIA ROUND ADJUSTABLE 5750

SKU 1256020

astro

PRODUCT SPECIFICATION

GENERAL

FINISH:	White	**CABLE LENGTH:**	450mm
MAIN MATERIAL:	Metal - Aluminium	**GROSS WEIGHT:**	0.336 (Kg)
DIMENSIONS:	D:68.5mm DIA: 95mm	**CLASS:**	CE (Class III)
INSTALLATION ORIENTATION:	Ceiling Mount	**IP RATING:**	IP21
CUT OUT HOLE:	86mm/3-3/8in	**BATHROOM ZONE:**	Zone 3
RECESS DEPTH:	150mm	**VOLTAGE:**	Constant Current 350 (mA)
FIRE RATING:	Not Applicable	**PRODUCT F MARK:**	Suitable for mounting on flammable materials

LAMP

LIGHT SOURCE:	COB LED	**MACADAM ELLIPSE:**	3-Step
MAXIMUM WATTAGE:	6.1W	**UGR:**	To Be Advised
MAXIMUM LAMP LENGTH:	Not Applicable	**BEAM ANGLE:**	36.1 (Degrees)
LAMP INCLUDED?	Yes (Integral)	**TILT ADJUSTMENT ANGLE:**	35 (Degrees)
LUMINOUS FLUX:	666.93 (lm)	**ROTATION ADJUSTMENT ANGLE:**	360 (Degrees)
COLOUR TEMP:	3000 (K)	**AVERAGE LIFESPAN:**	36,300 (Hrs)
CRI:	80	**L70:**	To Be Advised
R9:	14.4		

ELECTRICAL

SWITCHED:	No	**SUPPLY FREQUENCY:**	Not Applicable
DIMMABLE:	Yes	**DRIVER/BALLAST VOLTAGE:**	Not Applicable
DIMMING METHOD:	Control Gear Dependant	**DRIVER AVERAGE LIFESPAN:**	Not Applicable
DRIVER OUTPUT CURRENT:	Not Applicable	**EFFICACY:**	76.92 (lm/W)
DRIVER OUTPUT VOLTAGE:	Not Applicable	**DRIVER/BALLAST INCLUDED?**	Not Applicable

ADDITIONAL INFORMATION

CE

Product tested with 1836 - Multi voltage multi current LED Dali dimming driver

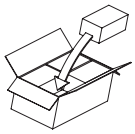

BOX QUANTITY x 50

PRODUCT ELEVATIONS
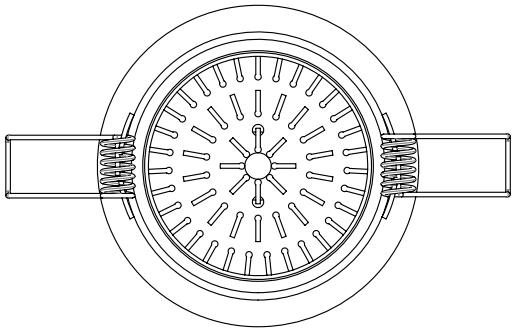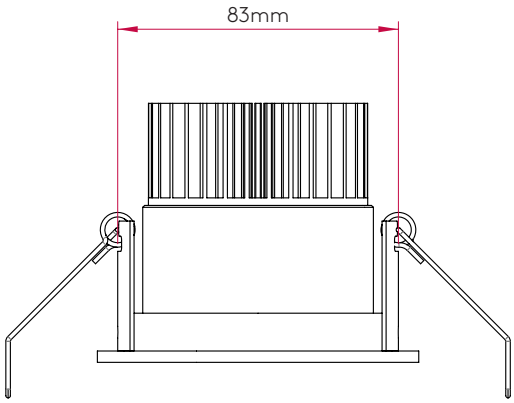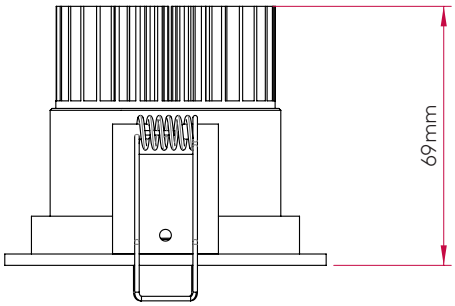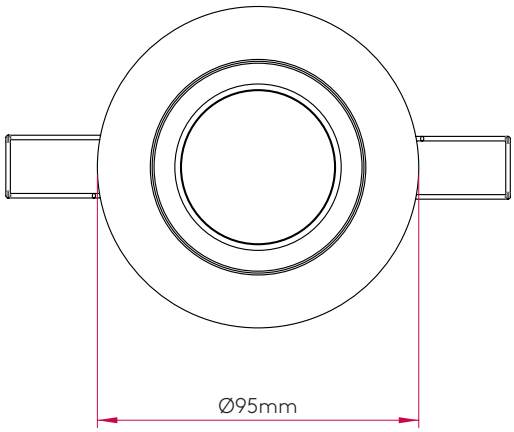
86mm / 3-3/8in